INTELLIGENT SUSPENSION SYSTEM

Circuit Schematic

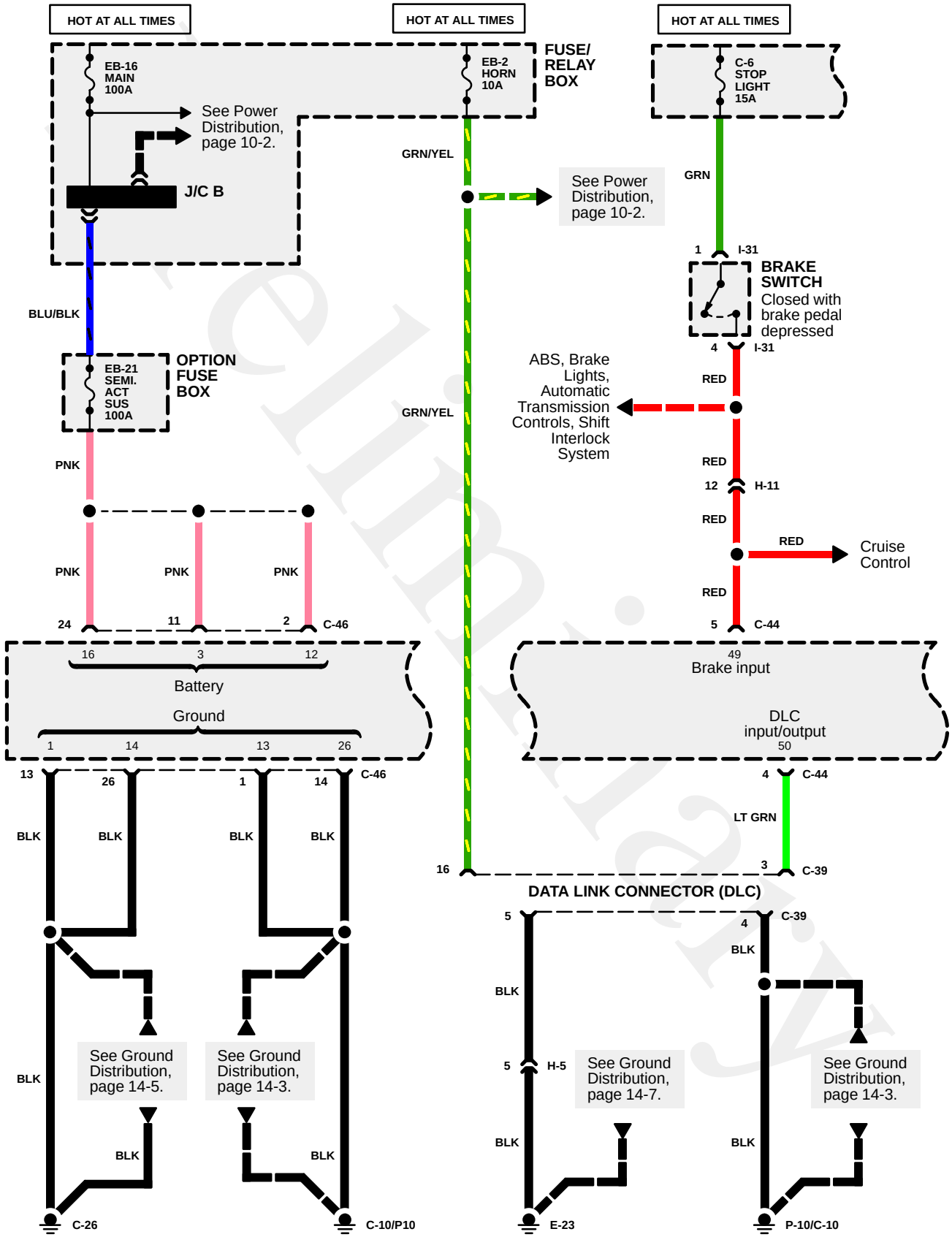

INTELLIGENT SUSPENSION SYSTEM

Circuit Schematic

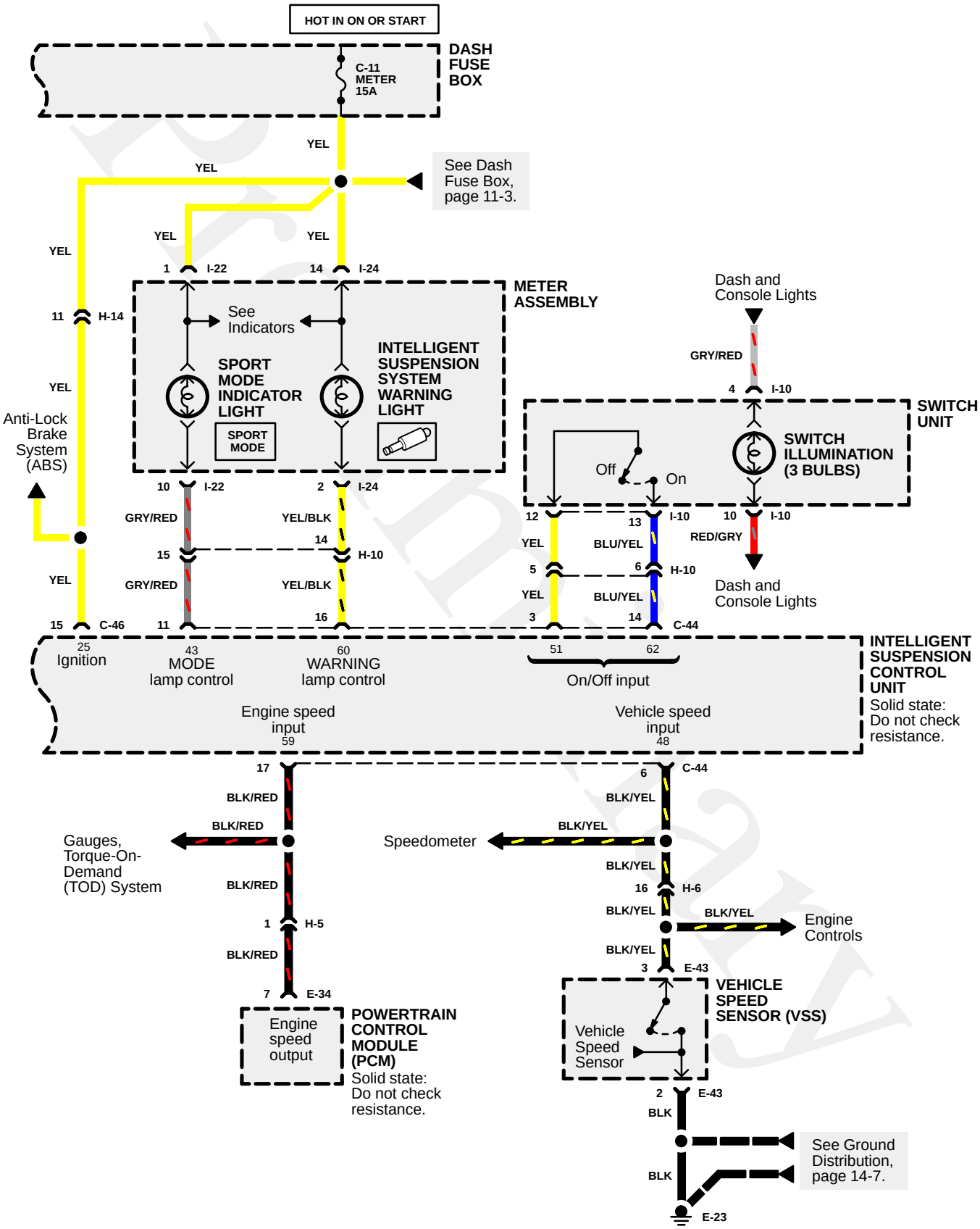

INTELLIGENT SUSPENSION SYSTEM

Circuit Schematic

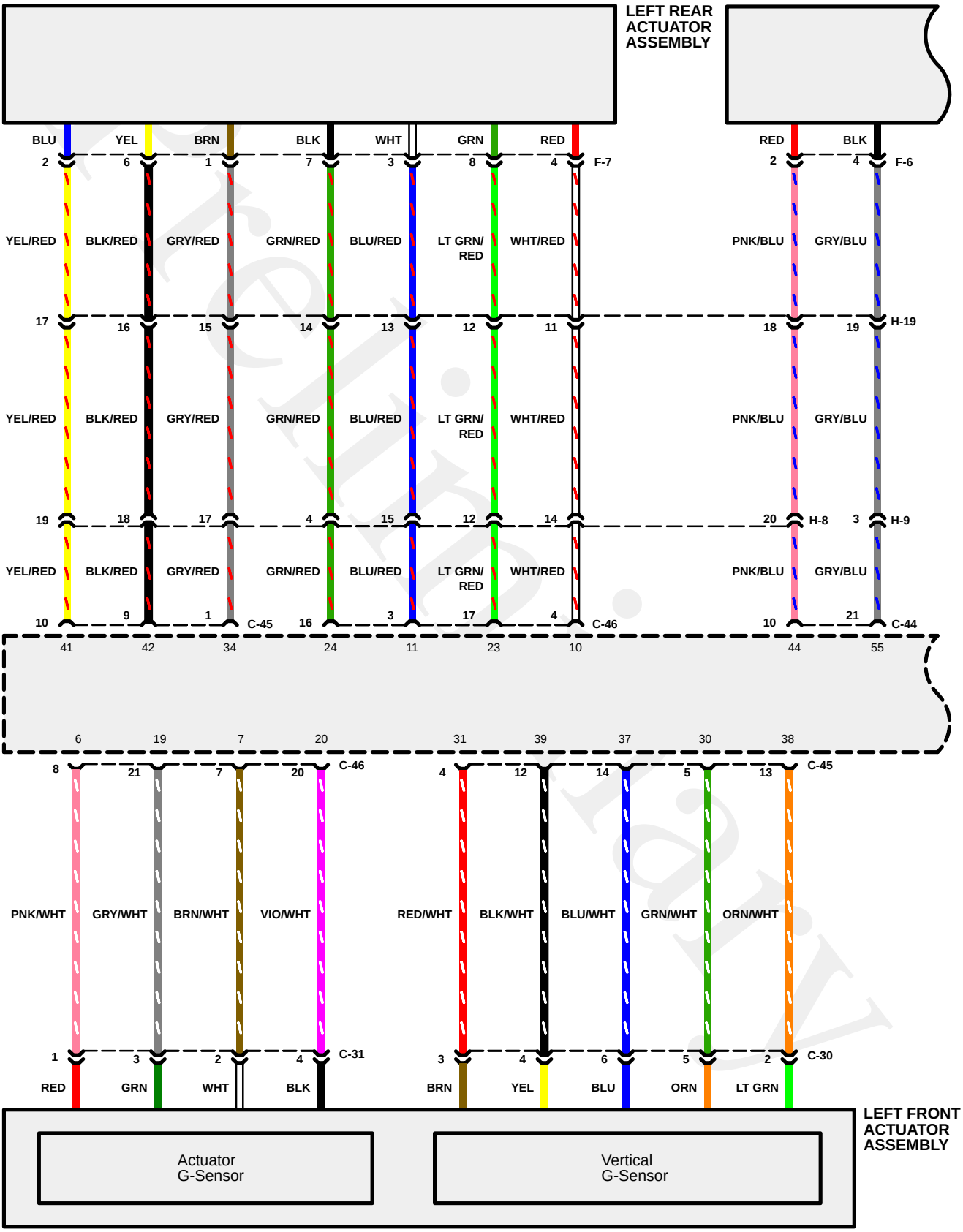

INTELLIGENT SUSPENSION SYSTEM
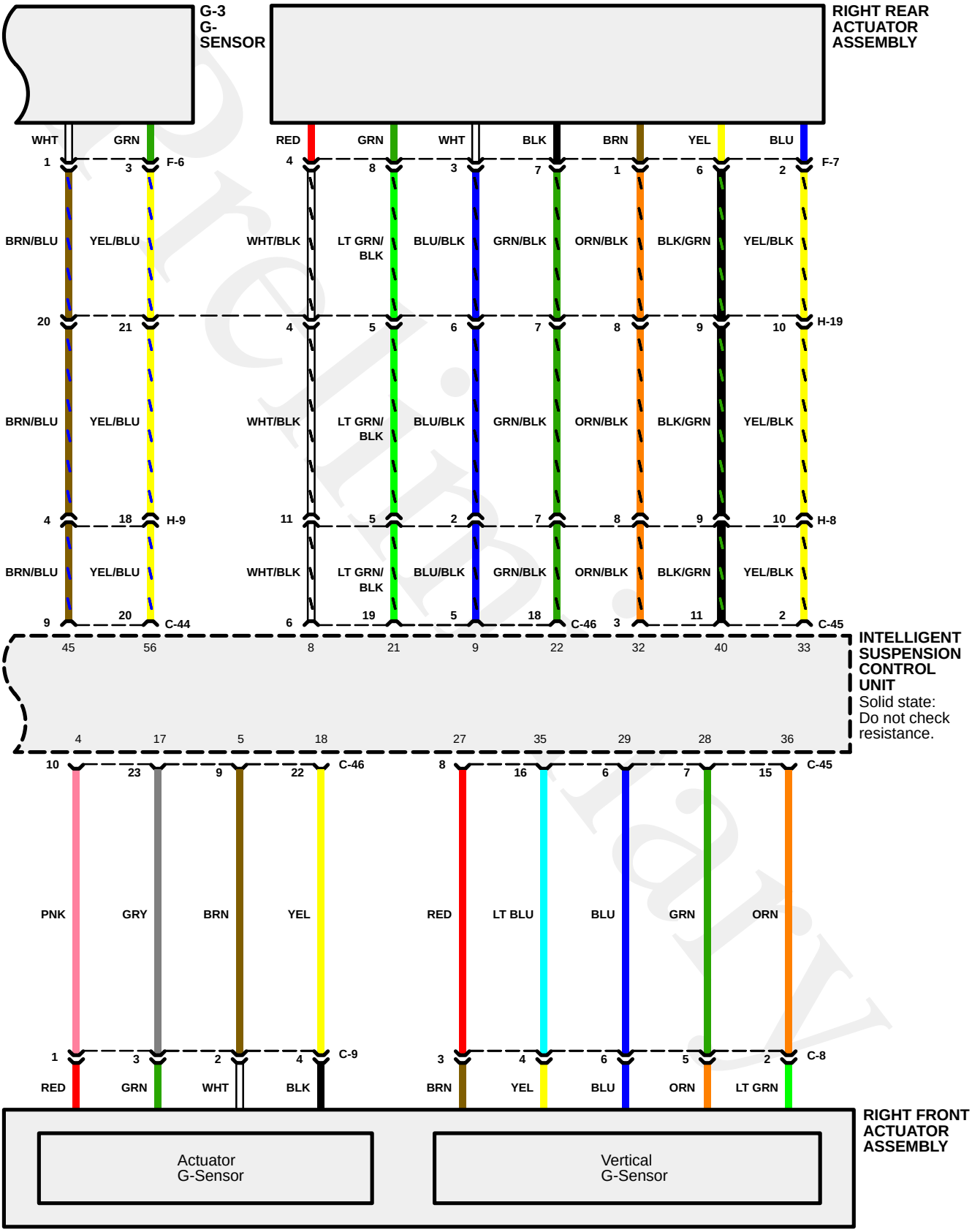
Circuit Schematic